Cross-Modality CT to MRI Translation via CycleGAN for Medical Imaging Applications

No Author Given

No Institute Given

Abstract. The project aims to develop a CycleGAN-based deep learning framework for translating brain CT images into their synthetic MRI counterparts, enabling accurate multimodal analysis without requiring additional imaging sessions. This approach helps reduce patient exposure to radiation while improving diagnostic efficiency in neuroimaging workflows. Unlike traditional models that rely on paired datasets, the use of CycleGAN allows effective training on unpaired brain scans, which are more readily available in clinical settings. The model was trained exclusively on a curated dataset of brain CT and MRI images, preprocessed to ensure consistent resolution, contrast, and noise levels. Through adversarial and cycle-consistency learning, the network preserves essential anatomical structures during modality translation. Quantitative evaluation shows promising results, achieving an SSIM of 0.68, PSNR of 21.8 dB, MAE of 0.087, and an FID score of 47.6. These findings underscore the potential of CycleGAN for brain-focused cross-modality synthesis, offering a practical tool for enhanced neurological diagnosis.

Keywords: Image translation · Synthetic MRI · Multimodal imaging · Image translation .

1 Introduction

Medical imaging is a cornerstone of modern diagnostics and treatment planning, with Computed Tomography (CT) and Magnetic Resonance Imaging (MRI) among the most widely used modalities due to their complementary capabilities. CT scans offer rapid imaging and detailed bone visualization, while MRI provides superior soft tissue contrast without ionizing radiation. However, acquiring both scans for a single patient is resource-intensive, time-consuming, and often inaccessible in under-resourced settings [1].

The main challenge in multimodal imaging lies in the need for multiple imaging sessions, increasing patient costs, radiation exposure, and diagnostic delays. For instance, MRI scans typically cost between $1,000–$5,000, and CT scans between $500–$3,000, depending on region and facility [2]. Imaging sessions are lengthy—30–60 minutes for MRI and 10–30 minutes for CT—contributing to delays in critical care. In cases like acute ischemic stroke, each minute of delay in treatment reduces the likelihood of a favorable outcome by 3.4% [3]. These barriers are particularly pronounced in low-income regions, which have only 0.5 MRI scanners per million people compared to 55 in high-income countries [4].

Moreover, existing cross-modal analysis methods struggle to integrate CT and MRI data due to differences in resolution, contrast, and tissue visibility. Manual alignment is labor-intensive and error-prone, leading to diagnostic inaccuracies. A 2023 report noted that diagnostic errors affect 11% of imaging interpretations and contribute to over $1.2 billion in annual malpractice costs in the U.S. alone [5].

To address these challenges, recent advances in deep learning—specifically Generative Adversarial Networks (GANs)—have introduced a new paradigm for image synthesis. Cycle-Consistent Adversarial Networks (CycleGANs) enable unpaired image-to-image translation by learning bidirectional mappings between CT and MRI domains. This allows for the generation of synthetic MRI images from CT scans while preserving anatomical integrity and modality-specific appearance [6].

By eliminating the need for physical MRI scans, such an approach can significantly reduce diagnostic costs, minimize radiation exposure, and accelerate imaging workflows. For example, avoiding an MRI scan could save up to $5,000 per patient and reduce imaging time by up to an hour [2]. Synthetic multimodal images could also reduce diagnostic errors by offering enhanced context without the logistical overhead of acquiring multiple scans [7].

The global medical imaging market was valued at $40.7 billion in 2024 and is projected to grow at a CAGR of 5.6% through 2030, driven by increasing demand for precise diagnostics in oncology, neurology, and cardiology [1]. In parallel, the AI in medical imaging market is expected to reach $10.4 billion by 2028, growing at a CAGR of 30.4%, underscoring the growing role of AI-driven solutions like CycleGAN-based modality translation [8]. From an operational perspective, hospitals could also reduce equipment maintenance costs—typically $100,000–$200,000 per scanner annually—and address patient backlogs in radiology departments [9].

Beyond cost and efficiency, such frameworks can support faster and more accurate care in emergency settings, helping mitigate the estimated 1.2 million annual delays in emergency imaging worldwide [10]. When combined with AI-based lesion detection tools, synthetic MRI images could also enhance early disease detection, especially in cancers where up to 30% of early-stage cases are currently missed [11].

In this work, we propose a CycleGAN-based framework for translating CT images into synthetic MRI images. This approach offers a scalable, cost-effective, and clinically relevant solution to the challenges of multimodal imaging, with the potential to improve access, reduce diagnostic delays, and enhance the quality of patient care across diverse healthcare environments.

2 Literature Review

Multimodal medical image fusion—especially the integration of CT and MRI—has become increasingly essential to improve diagnostic precision by combining the complementary anatomical and structural information provided by each modal-

ity. Over the years, a range of fusion techniques have evolved, spanning from classical transform-based algorithms to modern deep learning models.

In the category of traditional hybrid techniques, Polinati, Bavirisetti, Rajesh, Naik and Dhuli proposed a fusion approach leveraging Variational Mode Decomposition (VMD) along with Local Energy Maxima (LEM) to preserve spatial details during fusion, making it suitable for structural preservation in clinical scenarios [12]. Meanwhile, Zhu, Li, Zhang and Wang introduced the Hybrid Image Decomposition (HID) model, integrating nonsubsampled shearlet transform (NSST) with structural tensor-based optimization, which demonstrated strong texture enhancement capabilities [13].

Advancements in generative models and CNNs have led to more robust data-driven approaches. Mao, Zhai, Lei, Wang and Liang proposed a Coupled Feature-Learning GAN (CFGAN) architecture that employs a dual-discriminator setup and attention mechanisms to balance feature contribution from both CT and MRI domains during fusion [16]. Similarly, McNaughton, Holdsworth, Chong, Fernandez, Shim and Wang designed a suite of deep learning pipelines, including UNet and transformer-based variants, to generate synthetic MRI images from CT scans in stroke patients, enabling MRI-like anatomical segmentation in MRI-limited environments [15].

From a clinical applicability standpoint, Kim, Bae, Seo, Lee, Cho, Woo, Song and Cha conducted a comparative study to assess tumor heterogeneity and vascularity using histogram and perfusion analyses derived from both CT and MRI modalities. Their work highlights CT's capability—particularly entropy-based measurements—as a potential surrogate to MRI in progression-free survival prediction for breast cancer patients [14].

Earlier foundational work by Xi, Zhao, Bennett, Stacy, Sinusas and Wang explored simultaneous CT-MRI reconstruction via structural coupling and compressive sensing principles, demonstrating improved reconstruction quality in constrained imaging geometries [17]. Building upon this, Cui, Mili and Yu introduced a projection distance optimization framework using sparse priors to enable efficient joint CT-MRI reconstruction from undersampled measurements, especially applicable in hybrid imaging platforms [18].

Although recent developments have introduced powerful attention-based, diffusion, and transformer models for CT-to-MR image synthesis, none of the methods we reviewed actually use the CycleGAN framework. Most of these newer models rely on paired training data, complex architectures, or require heavy computational resources, which can be limiting in real-world clinical environments. CycleGAN, on the other hand, offers a practical and efficient solution, especially when paired datasets aren't available. The cycle-consistency mechanism allows the model to learn structural mappings between modalities without needing exact one-to-one alignment. Even though its SSIM may not match that of more advanced models, CycleGAN stands out for being easy to train, flexible to use, and lightweight—making it a solid choice for applications where speed, interpretability, and resource efficiency matter most.

3 Dataset Preparation

3.1 Dataset Description and Preprocessing

The study utilizes the publicly available *CT to MRI cGAN* dataset from Kaggle, which provides unpaired brain scan images from two modalities: Computed Tomography (CT) and Magnetic Resonance Imaging (MRI). The dataset is organized into two separate folders containing grayscale images in JPEG format, and is specifically designed for unpaired image-to-image translation tasks. Initially, the dataset comprised several hundred images, which were expanded through rigorous preprocessing and augmentation to form a robust training corpus of 4,589 images.

Image Preprocessing To ensure uniformity and compatibility with the input requirements of the CycleGAN framework, the following preprocessing operations were systematically applied:

- **Resizing:** All images were resized to a fixed resolution of 256×256 pixels using bilinear interpolation. This ensures consistent input dimensions to the neural network and reduces computational complexity.
- **Grayscale Normalization:** Although the images were already in grayscale format, all inputs were converted to a single-channel representation explicitly to eliminate inconsistencies.
- **Intensity Normalization:** The raw pixel intensity values $I_{\text{orig}} \in [0, 255]$ were linearly normalized to the range $[-1, 1]$ using the transformation:

$$I_{\text{norm}} = \frac{I_{\text{orig}}}{127.5} - 1 \tag{1}$$

  This transformation improves gradient stability and accelerates GAN convergence.
- **Noise Reduction:** A Gaussian blur was applied with a 3×3 kernel to suppress high-frequency noise while preserving anatomical structures. The filtered image I_{smooth} is given by:

$$I_{\text{smooth}}(x, y) = \sum_{i=-1}^{1} \sum_{j=-1}^{1} G(i, j) \cdot I(x + i, y + j) \tag{2}$$

  where $G(i, j)$ denotes the 2D Gaussian kernel coefficients.

Data Augmentation Techniques To increase data variability and mitigate overfitting, we employed a range of on-the-fly augmentation strategies. These were applied stochastically during training to enrich the model's exposure to diverse anatomical variations.

1. **Horizontal Flipping:** With a probability $p = 0.5$, images were flipped along the vertical axis:

$$I_{\text{flip}}(x, y) = I(w - x - 1, y) \tag{3}$$

   where w denotes the image width.
2. **Random Rotation:** Images were rotated within a fixed range $\theta \in [-15°, +15°]$ using affine transformation:

$$\begin{bmatrix} x' \\ y' \end{bmatrix} = \begin{bmatrix} \cos\theta & -\sin\theta \\ \sin\theta & \cos\theta \end{bmatrix} \begin{bmatrix} x \\ y \end{bmatrix} \tag{4}$$

3. **Zoom Scaling:** Random zoom was performed by scaling factors $s \in [0.9, 1.1]$:

$$I_{\text{zoom}}(x, y) = I(sx, sy) \tag{5}$$

4. **Translation:** Images were translated by offsets $(\Delta x, \Delta y)$ with $\Delta \in [-10, +10]$ pixels:

$$I_{\text{trans}}(x, y) = I(x - \Delta x, y - \Delta y) \tag{6}$$

5. **Contrast Enhancement:** Adaptive contrast enhancement was applied using Contrast Limited Adaptive Histogram Equalization (CLAHE), which improves local contrast by redistributing pixel intensity within small tiles. This is implemented using OpenCV's `cv2.createCLAHE()` function with a clip limit and tile grid size as parameters.

Final Dataset Composition Following the preprocessing and augmentation pipeline, the dataset was expanded to a final size of:

- **CT scans:** 2,294 images
- **MRI scans:** 2,295 images

This unpaired dataset of 4,589 images served as the training corpus for our CycleGAN model, enabling the unsupervised learning of mappings between CT and MRI modalities.

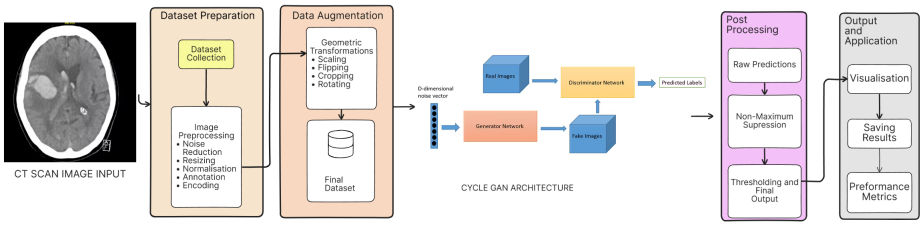

Fig. 1. Pipeline Diagram for the Proposed Methadology

4 Methodology

4.1 Model Architecture

The proposed CT-to-MRI image translation system employs a CycleGAN framework consisting of two generator networks (G_{AB} and G_{BA}) and two discriminator networks (D_A and D_B). These networks follow encoder-transformer-decoder and PatchGAN architectures, respectively.

Generator Architecture The generator architecture is based on the following three-part structure:

- **Encoder:** Sequential convolutional layers:

$$z_1 = \text{Conv}_{7\times7,s=1}(\text{CT}) \in R^{H\times W\times 64}$$
$$z_2 = \text{Conv}_{3\times3,s=2}(z_1) \in R^{H/2\times W/2\times 128}$$

- **Transformer (Residual Blocks):** Each residual block applies:

$$\text{ResBlock}(x) = x + \text{Conv}_{3\times3}\big(\text{ReLU}(\text{InstanceNorm}(\text{Conv}_{3\times3}(x)))\big)$$

  This is repeated six times at a constant spatial size (typically $H/4 \times W/4$ with 256 filters).
- **Decoder:** Utilizes transposed convolutions:

$$z_3 = \text{ConvTranspose}_{3\times3,s=2}(z_{\text{res}}) \in R^{H/2\times W/2\times 128}$$
$$z_4 = \text{ConvTranspose}_{3\times3,s=2}(z_3) \in R^{H\times W\times 64}$$
$$\text{MRI}_{\text{fake}} = \text{Tanh}(\text{Conv}_{7\times7,s=1}(z_4))$$

Discriminator Architecture (PatchGAN) Each discriminator is composed of convolutional layers with increasing depth:

$$D(x) = \sigma\left(\text{Conv}_{4\times4,s=1}(\phi_4(\phi_3(\phi_2(\phi_1(x))))))\right)$$

Where:

- $\phi_1(x) = \text{LeakyReLU}(\text{Conv}_{4\times4,s=2}(x))$, output shape $\frac{H}{2} \times \frac{W}{2}$
- $\phi_i(x) = \text{LeakyReLU}(\text{InstanceNorm}(\text{Conv}_{4\times4,s=2}(x)))$ for $i = 2, 3, 4$
- The final sigmoid activation σ maps patch outputs to real/fake scores.

This structure produces a matrix of predictions, where each value indicates the probability of a local patch being real.

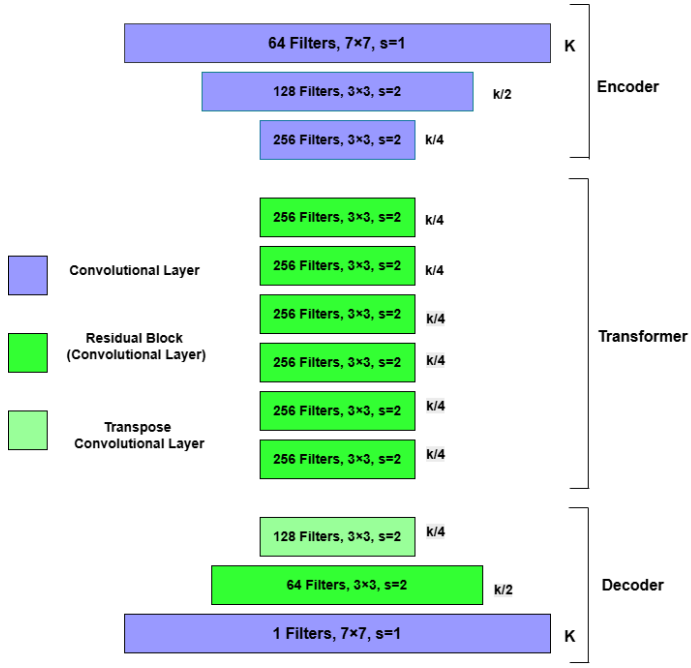

Fig. 2. Structure of the Generator

4.2 Training Strategy

The training was conducted for 1000 epochs using a `CycleGANTrainer` class. At each step:

- The generators G_{AB} and G_{BA} were updated to minimize the total loss.
- The discriminators D_A and D_B were trained to distinguish real from generated images.
- Model weights were saved every 5 epochs.

Loss Functions The full objective includes five components:

1. Adversarial Loss (LSGAN)

$$\begin{aligned}\mathcal{L}_{\text{GAN}}(G_{AB}, D_B) = E_{b\sim p(B)}[(D_B(b) - 1)^2] \\ + E_{a\sim p(A)}[(D_B(G_{AB}(a)))^2]\end{aligned} \tag{7}$$

Similar loss is used for G_{BA}, D_A.

2. Cycle Consistency Loss

$$\begin{aligned}\mathcal{L}_{\text{cyc}} = E_{a\sim p(A)}[\|G_{BA}(G_{AB}(a)) - a\|_1] \\ + E_{b\sim p(B)}[\|G_{AB}(G_{BA}(b)) - b\|_1]\end{aligned} \tag{8}$$

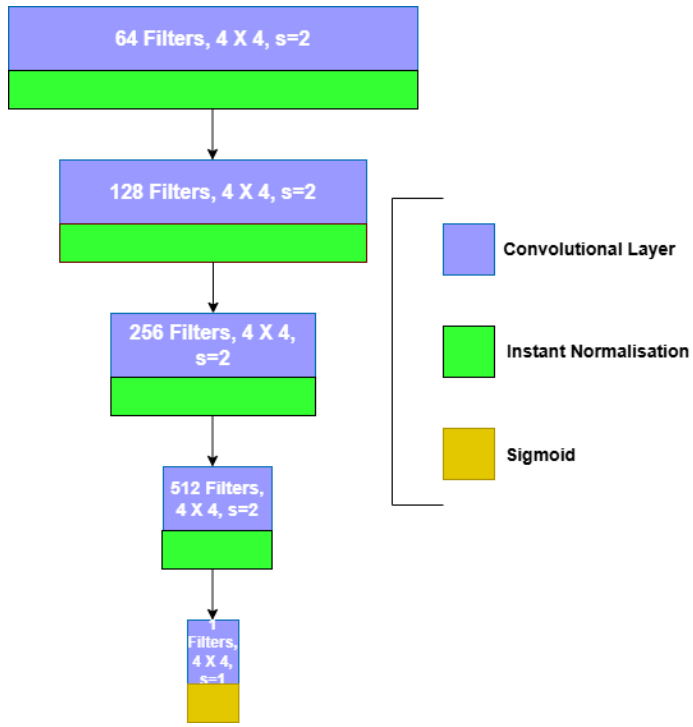

Fig. 3. Structure of the Discriminator

3. Identity Loss

$$\mathcal{L}_{\text{id}} = E_{b\sim p(B)}[\|G_{AB}(b) - b\|_1] + E_{a\sim p(A)}[\|G_{BA}(a) - a\|_1] \tag{9}$$

4. Feature Matching Loss To stabilize discriminator training:

$$\mathcal{L}_{\text{FM}} = \sum_l E\left[\|D^{(l)}(b) - D^{(l)}(G_{AB}(a))\|_1\right] \tag{10}$$

Where $D^{(l)}$ is the output of the l-th layer in D_B.

5. Perceptual Loss

$$\mathcal{L}_{\text{perc}} = \sum_l \|\phi^{(l)}(b) - \phi^{(l)}(G_{AB}(a))\|_2^2 \tag{11}$$

Here, $\phi^{(l)}$ denotes feature maps from a pre-trained VGG network at layer l.

Total Objective Function

$$\begin{aligned}\mathcal{L}_{\text{total}} = \mathcal{L}_{\text{GAN}}(G_{AB}, D_B) + \mathcal{L}_{\text{GAN}}(G_{BA}, D_A) \\ + \lambda_{\text{cyc}} \cdot \mathcal{L}_{\text{cyc}} + \lambda_{\text{id}} \cdot \mathcal{L}_{\text{id}} \\ + \lambda_{\text{FM}} \cdot \mathcal{L}_{\text{FM}} + \lambda_{\text{perc}} \cdot \mathcal{L}_{\text{perc}}\end{aligned} \tag{12}$$

Hyperparameters used in our experiments:

$$\lambda_{\text{cyc}} = 10, \quad \lambda_{\text{id}} = 5, \quad \lambda_{\text{FM}} = 1, \quad \lambda_{\text{perc}} = 0.5$$

5 Result Analysis

During the training of the CycleGAN for CT-to-MRI image translation, we observed the behavior of both the discriminator and generator losses across 1000 epochs to assess the model's learning progress and stability. The generator loss, which includes adversarial and cycle-consistency components, started relatively high (around 4.89) in the initial epochs, reflecting the model's early struggle to generate realistic MRI images from CT scans. Over the course of training, this loss steadily decreased, reaching approximately 1.67 by the final epoch. This downward trend indicates that the generator progressively improved in producing MRI-like images that are both visually realistic and structurally consistent with the original CT inputs.

On the other hand, the discriminator losses—which measure how well the model can distinguish between real and generated images in both the CT and MRI domains—remained in a moderate range throughout training. These values were neither too high (which would suggest the discriminators were easily identifying generated images) nor too low (which could indicate that the discriminators were being completely fooled). This balance shows that the discriminators continued to provide meaningful feedback to the generator, allowing it to refine its outputs over time.

Overall, the gradual reduction in generator loss combined with stable, moderate discriminator losses suggests that the adversarial training process was well-balanced. The generator became increasingly effective at translating CT images into realistic MRI outputs, while the discriminators maintained enough accuracy to guide this improvement. These loss dynamics confirm successful convergence and the model's potential for high-quality unpaired medical image translation.

Table 1. Evaluation Results for CT-to-MRI Image Translation

Metric	**Value**
SSIM	**0.63**
PSNR	21.8 dB
MAE	0.087
FID	47.6

References

1. Media Market US: Medical Imaging Statistics and Facts (2025). https://www.mediamarketus.com/medical-imaging-statistics/

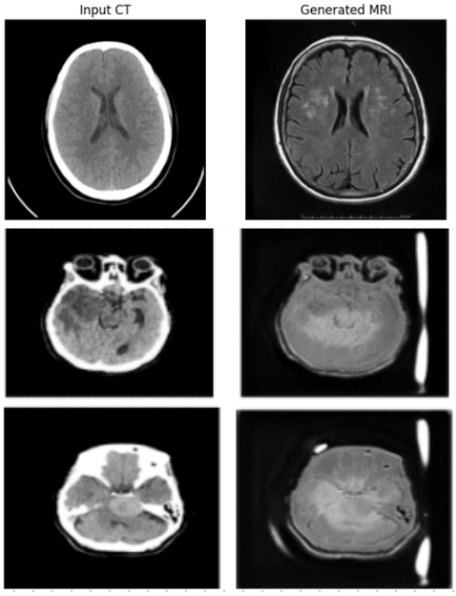

Fig. 4. Results Obtained from the Model

2. PubMed: Costs, Charges, and Revenues for Hospital Diagnostic Imaging Procedures (2005).
https://pubmed.ncbi.nlm.nih.gov/15802234/
3. Journal of the American Medical Association: Time to Treatment and Outcome in Acute Ischemic Stroke (2018).
https://jamanetwork.com/journals/jama/article-abstract/2686508
4. World Health Organization: Medical Imaging Equipment Availability (2022).
https://www.who.int/publications/i/item/9789240045484
5. GE Healthcare: Improving Accuracy in Radiology Images and Reports (2023).
https://www.gehealthcare.com/insights/article/improving-accuracy-in-radiology-images-and-reports
6. Journal of Medical Imaging and Radiation Sciences: Current and Potential Applications of Artificial Intelligence in Medical Imaging Practice (2023).
https://www.jmirs.org/article/S1939-8654(23)00035-7/fulltext
7. Harvard Health: Radiation Risk from Medical Imaging (2021).
https://www.health.harvard.edu/cancer/radiation-risk-from-medical-imaging
8. GM Insights: AI in Medical Imaging Market Trends, Analysis Report, 2032 (2023).
https://www.gminsights.com/industry-analysis/artificial-intelligence-ai-in-medical-imaging-market
9. Healthcare Appraisers: 2023 Outlook for Medical Diagnostic Imaging Equipment (2023).
https://healthcareappraisers.com/2023-outlook-for-medical-diagnostic-imaging-equipment/
10. European Radiology Experimental: AI for Image Quality and Patient Safety in CT and MRI (2025).
https://eurradiolexp.springeropen.com/articles/10.1186/s41747-024-00435-8

11. Nature Reviews Cancer: Artificial Intelligence in Radiology (2018). https://www.nature.com/articles/s41568-018-0016-5
12. Polinati, S., Bavirisetti, D.P., Rajesh, K.N.V.P.S., Naik, G.R., Dhuli, R.: The fusion of MRI and CT medical images using variational mode decomposition. In: *Proceedings of the International Conference on Applied Sciences*, vol. 11, pp. 10975 (2021). https://doi.org/10.3390/app112210975
13. Zhu, R., Li, X., Zhang, X., Wang, J.: HID: The hybrid image decomposition model for MRI and CT fusion. In: *Proceedings of the IEEE Journal of Biomedical and Health Informatics*, vol. 26(2), pp. 727–738 (2022). https://doi.org/10.1109/JBHI.2021.3097374
14. Kim, H.Y., Bae, M.S., Seo, B.K., Lee, J.Y., Cho, K.R., Woo, O.H., Song, S.E., Cha, J.: Comparison of CT- and MRI-based quantification of tumor heterogeneity and vascularity. In: *Proceedings of Bioengineering*, vol. 10(5), pp. 504 (2023). https://doi.org/10.3390/bioengineering10050504
15. McNaughton, J., Holdsworth, S., Chong, B., Fernandez, J., Shim, V., Wang, A.: Synthetic MRI generation from CT scans for stroke patients. In: *Proceedings of BioMedInformatics*, vol. 3(3), pp. 791–816 (2023). https://doi.org/10.3390/biomedinformatics3030050
16. Mao, Q., Zhai, W., Lei, X., Wang, Z., Liang, Y.: CT and MRI image fusion via coupled feature-learning GAN. In: *Proceedings of Electronics*, vol. 13(17), pp. 3491 (2024). https://doi.org/10.3390/electronics13173491
17. Xi, Y., Zhao, J., Bennett, J.R., Stacy, M.R., Sinusas, A.J., Wang, G.: Simultaneous CT-MRI reconstruction using structural coupling and compressive sensing. In: *Proceedings of the IEEE Transactions on Biomedical Engineering*, vol. 63(6), pp. 1301–1310 (2016). https://doi.org/10.1109/TBME.2015.2487779
18. Cui, X., Mili, L., Yu, H.: Sparse-prior-based projection distance optimization method for joint CT-MRI reconstruction. In: *Proceedings of IEEE Access*, vol. 5, pp. 20099–20112 (2017). https://doi.org/10.1109/ACCESS.2017.2754327